Disk Check Valve PN 40
DN 15 - 200 (½" - 8")
Stainless Steel Construction



Fig. VR-316

WAFER
Face to face dimensions
EN 558-1 Series 49

CE 0035

Ram Universal
sales@ramuniversal.co.uk
01455 285428
Unit 20 Swannington Rd,
Cottage Lane Industrial Estate,
Broughton Astley, Leicester
LE9 6TU

Authorized Distributor

Data given can be changed without notice

Disk Check Valve PN 40
DN 15 - 200 (½" - 8")
Parts and materials, Dimensions

Parts and materials

DN 15 to DN 50

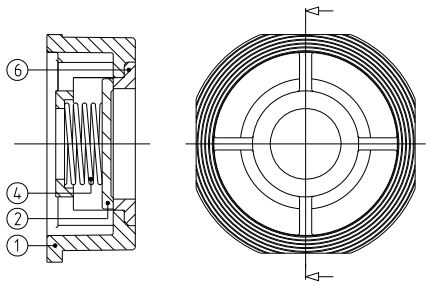

DN 65 to DN 100

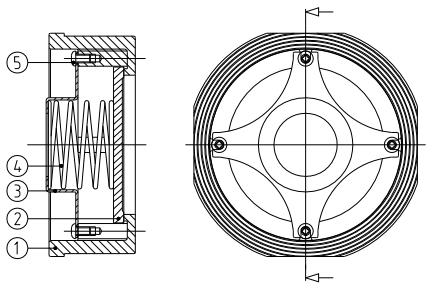

DN 125 & DN 200

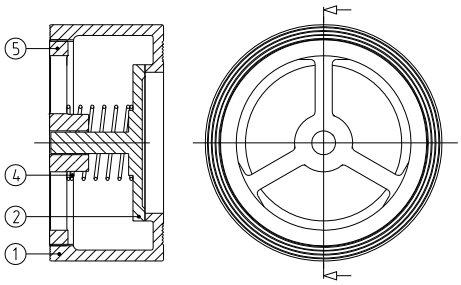

Item	Descr.	Material DN15-DN100	Material DN125-DN200
1	Body	1.4408	1.4408
2	Disc	AISI 316	1.4408
3	Cap	AISI 316	1.4408
4	Spring	AISI 316	AISI 316
5	Screw	AISI 316	
6	Insert	1.4408	

Dimensions

DN 15 to DN 50

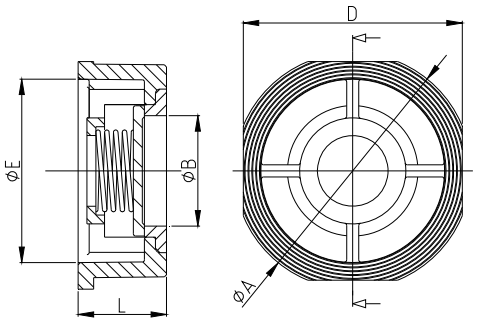

DN 65 to DN 100

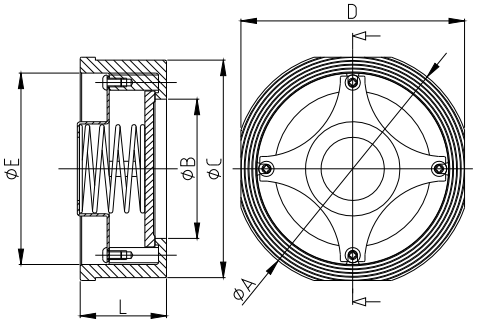

DN 125 & DN 200

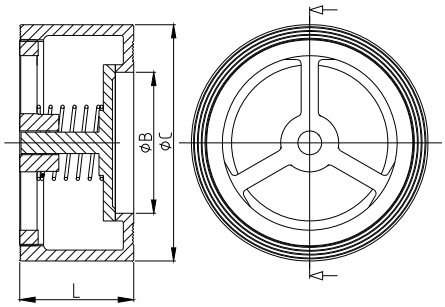

DN	ØA	ØB	ØC	D	E	L	WEIGHT	ASSEM. BET. FL. ANSI-150
15 (½")	53	15	41	45	34	16	0,1	OK
20 (¾")	63	20	46	55	37	19	0,16	OK
25 (1")	73	25	56	65	46	22	0,28	OK
32 (1¼")	84	32	74	78	63	28	0,52	--
40 (1½"	94	38	86	89	76	31,5	0,7	NO
50 (2")	107	50	96	98	83	40	1,1	OK
65	126	62	115	118	103	46	1,58	OK
80 (3")	144	77	131	134	117	50	1,76	OK
100 (4")	162	96	150	154	132	60	3,3	OK
125 (5")	---	105	190	---	---	90	10	OK
150 (6")	---	130	218	---	---	106	13	OK
200 (8")	---	170	273	---	---	140	24	OK

Note:
Dimensions not subject to International Standards can vary in ±10%. RAM reserves the right to change those dimensions without notice, due to they do not affect integrity and performance of the valves.

(*) Dimensions in mm and weight in kg.

Ram Universal
sales@ramuniversal.co.uk
01455 285428
Unit 20 Swannington Rd,
Cottage Lane Industrial Estate,
Broughton Astley, Leicester
LE9 6TU

Authorized Distributor

Data given can be changed without notice

Disk Check Valve PN 40
DN 15 - 200 (½" - 8")
Opening Pressure, KV, P&T Rating

Opening pressure in mbar

VALVE SIZE	Direction of the fluid			VALVE SIZE	Direction of the fluid		
	↑	↓	→		↑	↓	→
DN 15 (½")	25	21	23	DN 65 (1½")	31	21	25
DN 20 (¾")	**25**	21	23	DN 80 (3")	32	21	26
DN 25 (1")		21	23	DN 100 (4")	33	21	27
DN 32 (1¼")	27	21	24	DN 125 (5")	35	11	23
DN 40 (1½")	29	21	25	DN 150 (6")	39	12	25
DN 50 (2")	29	21	25	DN 200 (8")	41	12	27,5

Kv Values in m3/h

VALVE SIZE	Kv	VALVE SIZE	Kv
DN 15	8	DN 65	91
DN 20	21	DN 80	134
DN 25	30	DN 100	238
DN 32	42	DN 125	376
DN 40	50	DN 150	541
DN 50	61	DN200	964

Pressure-Temperature

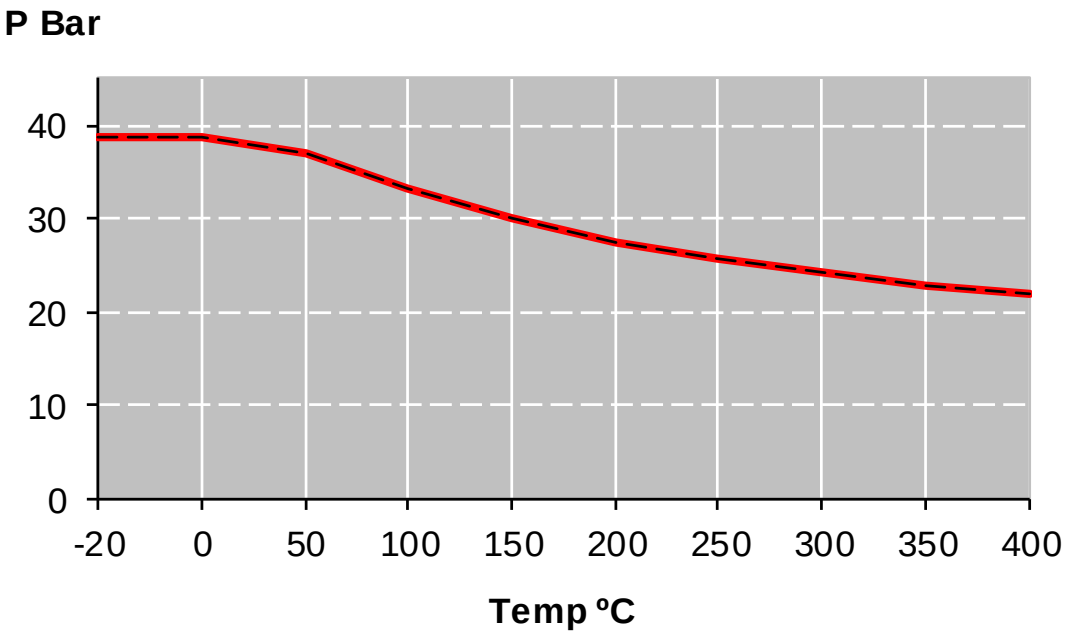

Ram Universal
sales@ramuniversal.co.uk
01455 285428
Unit 20 Swannington Rd,
Cottage Lane Industrial Estate,
Broughton Astley, Leicester
LE9 6TU

Authorized Distributor

Data given can be changed without notice