Inverted bucket steam trap

Model 343

EN ASME/FNPT

To extract saturated or super-heated low-pressure steam condensates.

Applicable to: steam piping, heat exchangers, plants with automatic temperature control, etc., in the chemical and petrochemical industries, etc.

Specifications

- This steam trap operates with an inverted floater that moves as a result of the difference in density between the condensates and the steam. When there are condensates the floater lowers, freeing the seat valve and allowing the condensates to exit. When steam enters, the floater rises and blocks the pathway, guaranteeing a line free of condensates. This action is repeated cyclically, automatically removing the air and accumulated condensates.
- Materials carefully selected for wear, temperature and corrosion resistance.
- Simple construction.
- Long life cycle with high operating efficiency.
- Practically maintenance-free.
- Compact, robust. Reduced weight and size, which facilitate storage.
- Ideal for medium to high condensate discharge capacities.
- Excellent performance with intermittent discharges.
- It evacuates at the steam temperature, which guarantees maximum heat transfer.
- Precise opening and closing, preventing steam losses.
- The ratings plate provides information on the service and installation conditions.
- For vertical installation only, in the flow direction indicated by the arrow.
- Silent running.
- Insensitive to vibration, water hammers, reheated steam, corrosive condensate and icy conditions, etc.
- Back-pressure and condensate temperature variations do not affect it.
- Treated closing surfaces, which are grinded, lapped and burnished in order to achieve a degree of leak-tightness that even exceeds that required by EN 12266-1.
- All steam traps are rigorously tested and verified.
- Each component is numbered, registered and monitored. If previously requested, all the certificates for materials, castings, tests and performances will come with the steam trap.

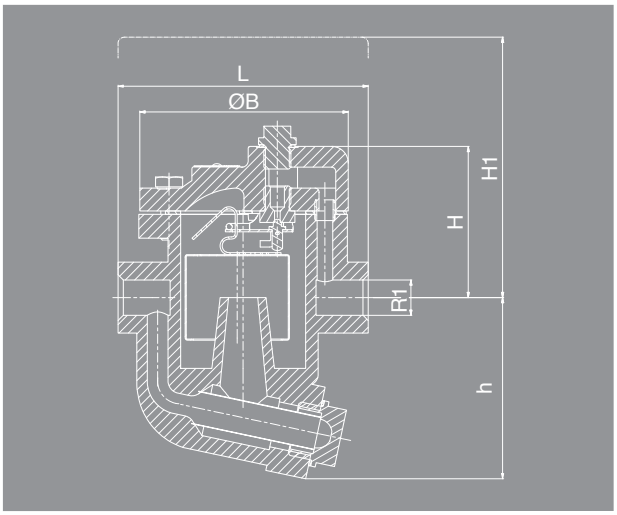

IMPORTANT

On order:

- Option for manufacturing in other materials for special working conditions (high temperatures, fluids, etc).
- Insulating jackets to prevent radiation losses caused mainly by inclement weather conditions.

R1		1/2"			3/4"			1"		
CONNECTIONS		Threaded female Gas Whitworth cylindrical ISO 228/1 from 1978 (DIN-259) NPT thread, ANSI-B2.1								
H		73			97			142		
H1		150			210			284		
h		87			109			119		
L		130			130			180		
øB		100			100			160		
WEIGHT IN kgs.		3,20			3,80			9,20		
MAXIMUM PRESSURE DIFFERENTIAL IN bar		11,00	8,50	4,00	12,50	8,50	4,00	14,00	8,50	4,00
CODE 2108 –	GAS	343.50261	343.50262	343.50263	343.53461	343.53462	343.53463	343.51061	343.51062	343.51063
	NPT	343.502611	343.502621	343.502631	343.534611	343.534621	343.534631	343.510611	343.510621	343.510631

N°. PIECE.	PIECE	MATERIAL
1	Body	Cast iron (EN-JL1040)
2	Cover	Cast iron (EN-JL1040)
3,10	Seal	Klingerit-type cardboard
4	Screw	Carbon steel (EN-1.1191)
5	Plate	Stainless steel (EN-1.4301)
6	Rivet	Carbon steel (EN-1.1141)
7,9	Plug	Carbon steel (EN-1.1181)
8	Seal	Copper
11	Filter	Stainless steel (EN-1.4301)
12	Floater	Stainless steel (EN-1.4301)
13	Arm	Stainless steel (EN-1.4301)
14	Lever	Stainless steel (EN-1.4301)
15	Reinforcement	Stainless steel (EN-1.4301)
16	Valve	Stainless steel (EN-1.4028)
17	Pin	Stainless steel (EN-1.4301)
18	Guide	Stainless steel (EN-1.4301)
19	Support	Stainless steel (EN-1.4301)
20	Screw	Stainless steel (EN-1.4301)
21	Seat	Stainless steel (EN-1.4028)
22	Bushing	Stainless steel (EN-1.4301)
R1		1/2" to 1" (GAS, NPT)
SERVICE CONDITIONS	MAXIMUM ACCEPTABLE PRESSURE IN bar	16
	MAXIMUM ACCEPTABLE TEMPERATURE IN ºC	220
	MAXIMUM ACCEPTABLE COUNTER PRESSURE AT OUTPUT COMPARED TO INPUT PRESSURE	90%
	MINIMUM PRESSURE DIFFERENTIAL IN bar	0,1

CONDENSATE DISCHARGE CAPACITY IN kg/h														
R1	MAXIMUM PRESSURE DIFFERENTIAL IN bar	PRESSURE DIFFERENTIAL IN bar												
		0,5	1	2	3	4	5	6	7	8,5	10	11	12,5	14
1/2”	11	40	80	125	140	180	190	210	225	245	260	280		
	8,5	65	115	180	215	250	265	280	290	300				
	4	110	160	210	250	280								
3/4”	12,5	65	115	180	215	250	270	290	310	330	360	375	390	
	8,5	120	180	250	290	330	360	380	400	430				
	4	160	225	310	350	410								
1”	14	65	125	200	265	310	340	385	420	450	485	500	530	565
	8,5	190	330	490	600	660	725	785	830	860				
	4	265	430	640	800	890								

Safety factor

When discharged, the temperature of the condensates is the same as the temperature of the steam, so the real capacity of the purger is lower in terms of the condensate flow shown in the capacity table. For this reason, we must apply a safety factor to the required discharge capacity.

FIELD OF APPLICATION	SAFETY FACTOR	
	Pressure	
	Constant	Variable
Heating processes	2	3
Condensate collector	1,5	1,5
Steam lines	1,5	1,5

Selection guidelines

Select the smallest purger size that, given the operating pressure differential, offers the discharge capacity you need multiplied by a safety factor of between 2 and 3. For example: Input pressure: 4 bar. Counter pressure: 1 bar. Required discharge capacity: 150 kg/h. Safety factor: 2. Selected discharge capacity: 300 kg/h. (2x150 kg/h).

Choose Mod. 343, 3/4" size, for a maximum pressure differential of 4 bar.

www.vycindustrial.com
Avenc del Daví, 22 Pol. Ind. Can Petit 08227 TERRASSA (Barcelona) SPAIN
+34 93 735 76 90 +34 93 735 81 35 119 info@vycindustrial.com