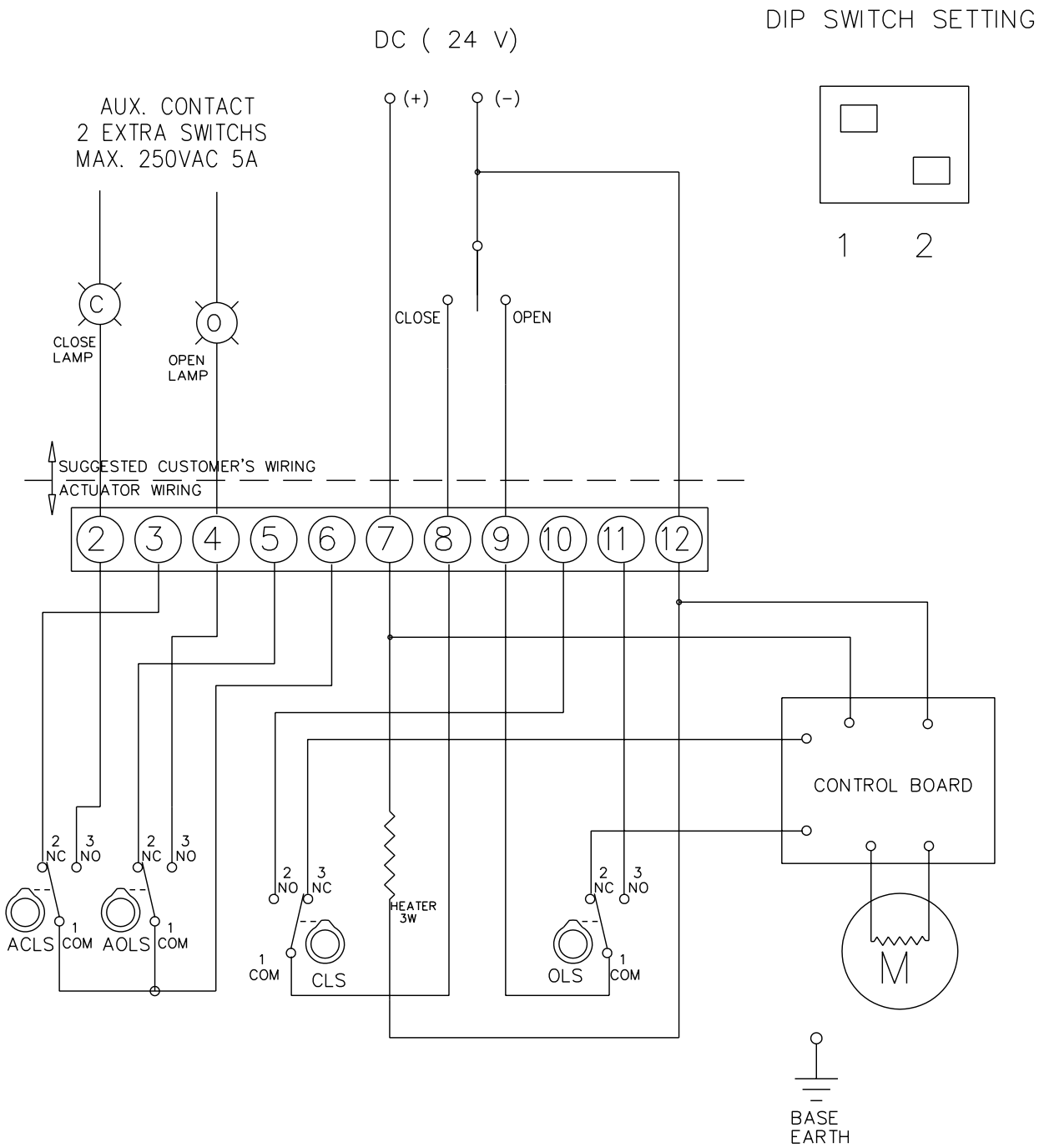

DIP SWITCH SETTING

TORQUE AND LIMIT SWITCH OPERATION

SWITCH	CLOSE ←	INTERMEDIATE	→ OPEN
CLS 1–2			
CLS 1–3			
OLS 1–2			
OLS 1–3			

SYMBOL	DESCRIPTION	RATING
CLS	CLOSE LIMIT SWITCH	250VAC 5A
OLS	OPEN LIMIT SWITCH	250VAC 5A

*EACH ACTUATOR SHOULD BE POWERED THROUGH IT'S OWN INDIVIDUAL SWITCH OR RELAY CONTACTS TO PREVENT CROSS FEED BETWEEN TWO OR MORE ACTUATORS.

PART NAME	DC WIRING DIAGRAM STANDARD(DC 24V)
DWG. NO	HQ–840–B
DATE 2004.12.01	ISSUE REF: B

HQ–006
HQ–004
APPLICATION

RAM UNIVERSAL LTD.
Unit 20
Cottage Lane Industrial Estate
Broughton Astley
Leicestershire
United Kingdom, LE9 6TU
T: +44 (0)1455 285428
F: +44 (0)1455 285404
W: ramuniversal.co.uk

DOC : WD–01 1–09–2008